Installation Instruction

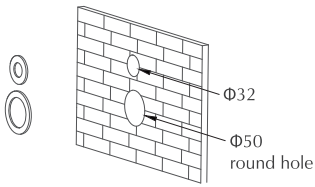

Note:
1. Hole size required for spout 32mm
2. Hole size required for mixer 50mm

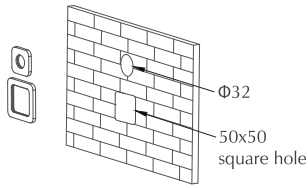

Note: (It fits Tiago & Beki range)
1. Hole size required for spout 32mm
2. Hole size required for mixer 50x50mm

1

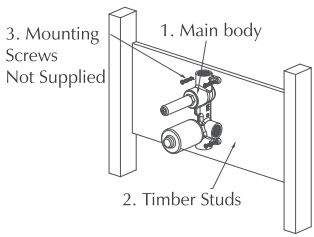

1. Place item (Main Body) onto the timber studs or concrete wall e.t.c. screw into the frame.
(note: make sure mixer is level.)
1.1. Please don't remove protective cover until tiling is finished / Fit off.

1.1

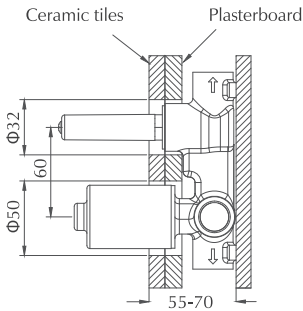

Installation toletrance: Depth 55-70mm form noggin to outer edge of ceramic tiles.

2

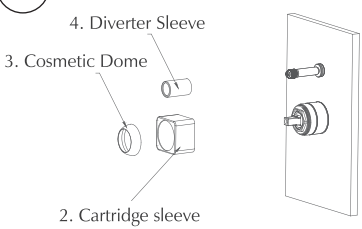

2. Install cartridge sleeve and cosmetic dome on the main body.

3

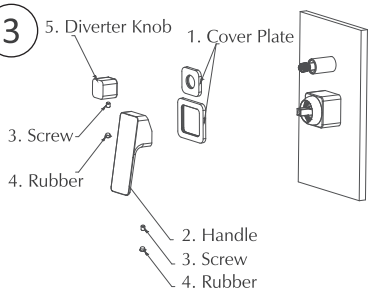

3. Install cover plate, Handle and outlet spout on the main body.
3.1. Install cover plate
3.2. Install handle and tighten the screw
3.3. Install outlet spout and tighten the screw